Installation Instructions

Part No. 30HW-900---008, 30MP-900---021

SAFETY CONSIDERATIONS

Installation of this accessory can be hazardous due to system pressures, electrical components and equipment location. Only trained, qualified installers and service mechanics should install and service this equipment.

When installing this accessory, observe precautions in the literature, labels attached to the equipment, and other safety precautions that apply.

- Follow all safety codes.
- Wear safety glasses and work gloves.
- Use care in handling and installing this accessory.

USAGE

PART NO.	UNIT
30HW-900---008	19XR04026501
	19XR04026502
	19XR04026503
	30HWA,HWB018-040
	30HWC,HWS018-040
30MP-900---021	30MPA,MPW015-071

INTRODUCTION

Install this package after bringing unit into the building. For 30HWA,HWB units, install this package before removing the shipping skid. For 30HWC,HWS units, 30MP units, and 19XR pumpout unit, the unit must be raised off from the shipping skid by approximately 6 inches. After the accessory mobility package is installed, the unit can be moved to its final location.

PACKAGE CONTENTS*

PART NO.	QUANTITY	ITEM
30HW-900---008	4	Wheel Assemblies (includes wheel, nut, and washer)
	4	Spacers
30MP-900---021	6	Wheel Assemblies
	24	$^{5}/_{16}$-in.-18 Bolts
	24	$^{5}/_{16}$-in.-18 Nuts
	24	$^{5}/_{16}$-in. Lock Washers
	48	$^{5}/_{16}$-in. Flat Washers

*The 30HWC,HWS units require 2 accessory mobility packages.

INSTALLATION

30HWA,HWB Units

IMPORTANT: LEAVE THE UNIT ON THE SHIPPING SKID until installation of the wheels is completed.

1. Examine the package contents. Check to be sure there are 4 wheel assemblies and 4 spacers in the carton. Notify your Carrier representative if pieces are missing or if the accessory is damaged.
2. Remove the mounting feet. The 30HWA and HWB units have a mounting foot on each corner upright post for the purpose of mounting the wheel assemblies.

   Remove the 4 bottom self-threading screws from the corner upright and remove the mounting foot. See Fig. 1. Save screws and mounting feet to use in Step 4.
3. Mount one wheel assembly and spacer to each of the mounting feet as shown in Fig. 2. Tighten the nut so that it holds the wheel assembly securely once the assembly is mounted on the unit. Minimum torque of 20 ft-lb (27 N•m) is recommended.
4. Using the screws removed in Step 2, reattach the mounting feet (with wheel assemblies) back onto the unit corner uprights and tighten the screws.

IMPORTANT: Be careful not to overtighten the self-threading screws and strip the threads. If overtightening occurs and the threads are stripped, install a field-supplied $^{3}/_{8}$-in. lockwasher and nut onto the screw to hold it in place.

Once all 4 wheel assemblies have been mounted in place and tightened, remove the unit from the shipping skid and roll it to the desired location.

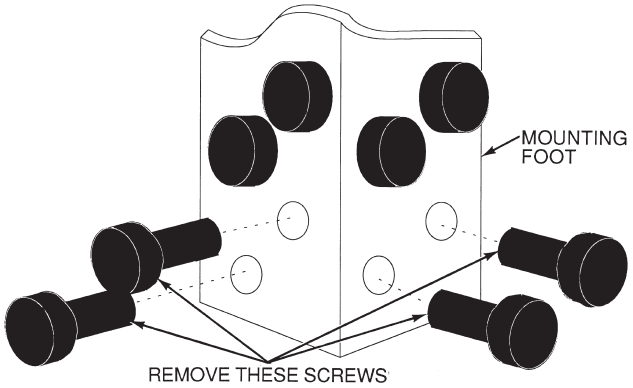

Fig. 1 — Removing Mounting Foot, 30HWA, 30HWB Units

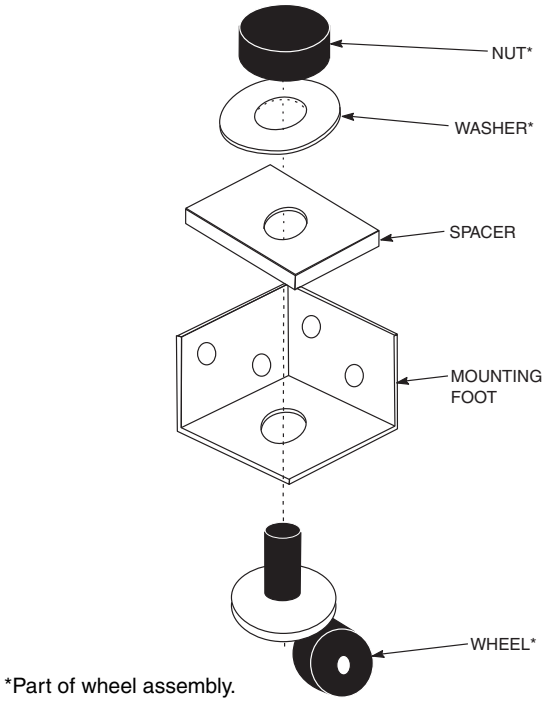

Fig. 2 — Mounting Wheel Assembly and Spacer to Mounting Foot, 30HWA,HWB Units

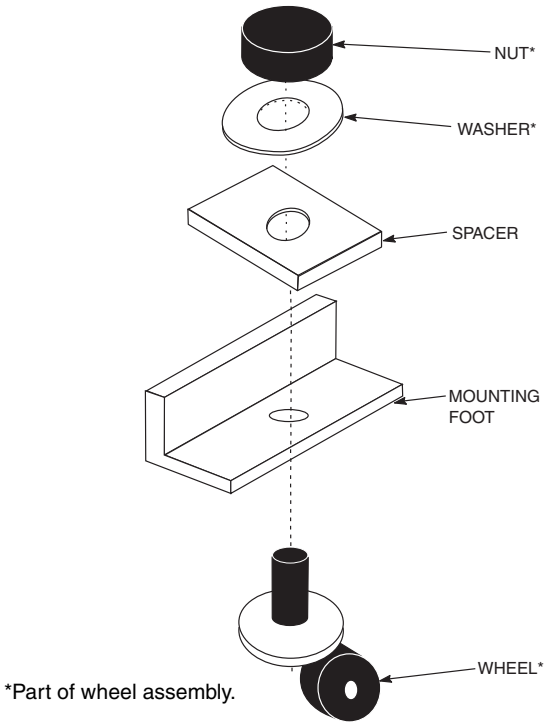

Fig. 3 — Mounting Wheel Assembly and Spacer to Mounting Foot, 30HWC,HWS Units

30HWC,HWS Units

IMPORTANT: The 30HWC,HWS units require 2 accessory mobility packages.

1. Examine the package contents. Check to be sure there are 4 wheel assemblies and 4 spacers in each of the 2 mobility package cartons. Notify your Carrier representative if pieces are missing or if either package is damaged.
2. Remove the lag bolts from the shipping skid and discard the bolts. There are 8 lag bolts holding the unit to the skid.
3. Jack up the unit to a height of approximately 6 in. above the shipping skid and block in place. Be sure to block the unit securely so that it cannot fall during installation of the mobility packages.
4. Mount the wheel assemblies to the mounting feet. Mount one wheel assembly and spacer to each of the mounting feet as shown in Fig. 3. Tighten the nut so that it holds the wheel assembly securely once the assembly is mounted on the unit. Minimum torque of 20 ft-lb (27 N•m) is recommended.
5. Remove the shipping skid from under the unit, remove the blocks, and carefully place unit back onto the floor. The unit is now ready to roll to the desired location.

30MP Chillers

IMPORTANT: Securely lift unit until installation of the kit is completed. Be sure to block the unit securely so that it cannot fall during the installation.

1. Examine the package contents. The 30MP units require 6 wheels. Check to be sure there are 6 wheel assemblies in the carton. Each wheel requires 4 bolts, 8 flat washers, 4 lock washers, and 4 nuts. Notify your Carrier representative if pieces are missing or if the accessory is damaged.
2. Remove the packaging bolts and discard the packaging.
3. Jack up the unit to a height of approximately 6 in. above the floor and block it in place. Be sure to block the unit securely so that it cannot fall during installation of the mobility package.
4. Mount the wheel assemblies to the unit. Mount one wheel assembly to each of the baseframe mounting points as shown in Fig. 4 and 5.
5. Tighten each nut so that it holds the wheel assembly securely once the assembly is mounted on the unit. A minimum torque of 12 ft-lb (16 N•m) is recommended.
6. Remove the blocks, and carefully place unit back onto the floor. The unit is now ready to roll to the desired location.

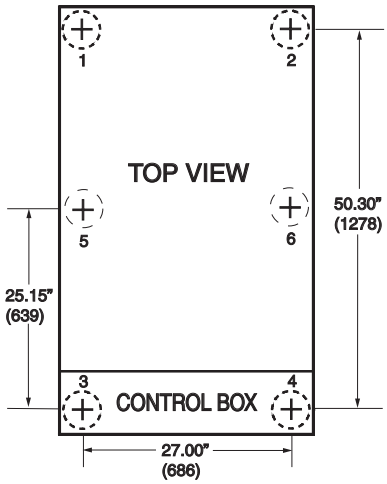

NOTE: Dimensions in ( ) are in mm.

Fig. 4 — Baseframe Mounting Points, 30MP Units

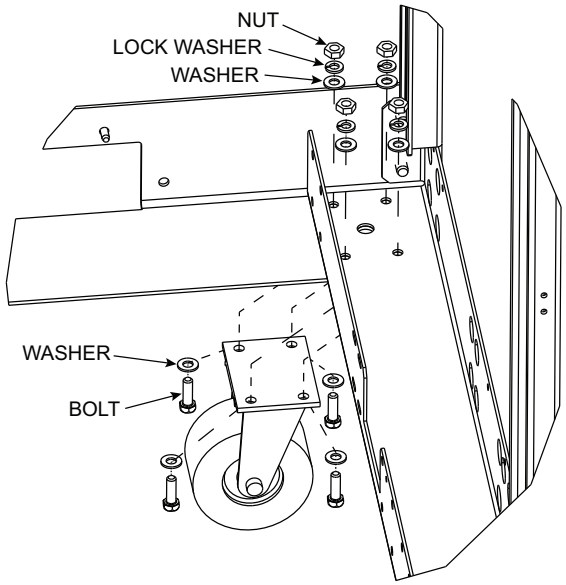

Fig. 5 — Mounting Wheel Assembly, 30MP Units

19XR Pumpout Units

1. Examine the package contents. Check to be sure there are 4 wheel assemblies in the carton. Spacers are included in the carton but are not used and can be discarded. Notify your Carrier representative if pieces are missing or if the accessory is damaged.
2. Remove 4 lag bolts attaching the unit to the skid and discard the bolts.
3. Jack up the unit to a height of approximately 6 in. above the shipping skid and block in place. Be sure to block the unit securely so that it cannot fall during installation of the mobility package.
4. Mount the wheel assemblies to the unit. Mount one wheel assembly to each of the basepan mounting holes as shown in Fig. 6. Use the same mounting holes from which the lag bolts were removed in Step 2. Tighten the nut so that it holds the wheel assembly securely once the assembly is mounted on the unit. A minimum torque of 20 ft-lb (27 N•m) is recommended.
5. Remove the shipping skid from under the unit, remove the blocks, and carefully place unit back onto the floor. The unit is now ready to roll to the desired location.

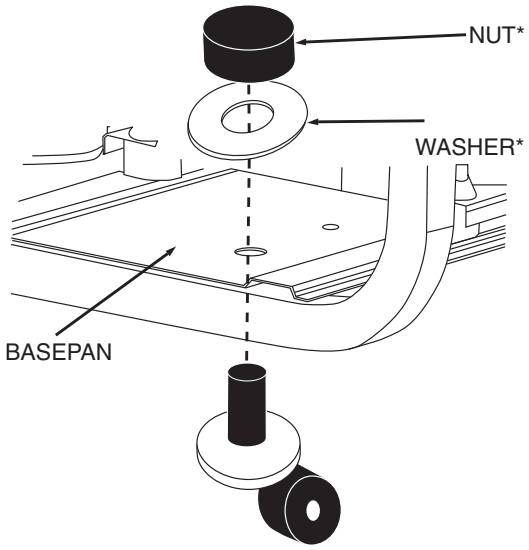

*Part of wheel assembly.

Fig. 6 — Mounting Wheel Assembly to Pumpout Assembly Basepan, 19XR Units

© Carrier Corporation 2015